CS 68: BIOINFORMATICS

Prof. Sara Mathieson
Swarthmore College
Spring 2018

Outline: Jan 29

- Continue: de Bruijn graph (DBG) assembly theory
- DBG assembly in practice
- Evaluation of assemblies

Candidate job talks:

Monday	11:30-12:20
Wednesday	11:30-12:20

Notes:

- Lab 1 due Wednesday
- Assembly reading posted: spend 1.5 hours max
- Office hours today 3-5pm
- Fill out partner form for Lab 2 (if you know who you want to work with)

Recap:
building the de Bruijn graph (DBG)

Take each length-3 input string and split it into two overlapping substrings of length 2. Call these the *left* and *right 2-mers*.

AAABBBA

take all 3-mers: AAA, AAB, ABB, BBB, BBA

form L/R 2-mers: AA, AA, AA, AB, AB, BB, BB, BB, BB, BA

L R L R L R L R L R

Let 2-mers be nodes in a new graph. Draw a directed edge from each left 2-mer to corresponding right 2-mer:

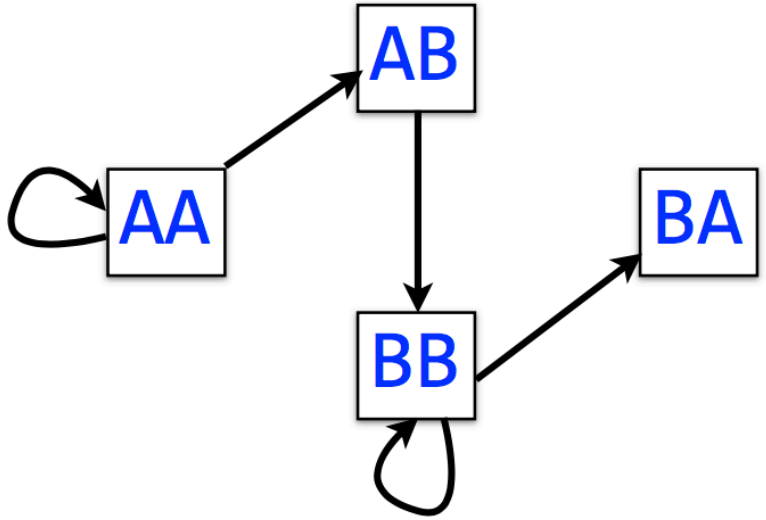

Each *edge* in this graph corresponds to a length-3 input string

Slide: adapted from Ben Langmead, John Hopkins

DBG:

-Nodes: (k-1)-mers

-Edges: k-mers of the genome or reads

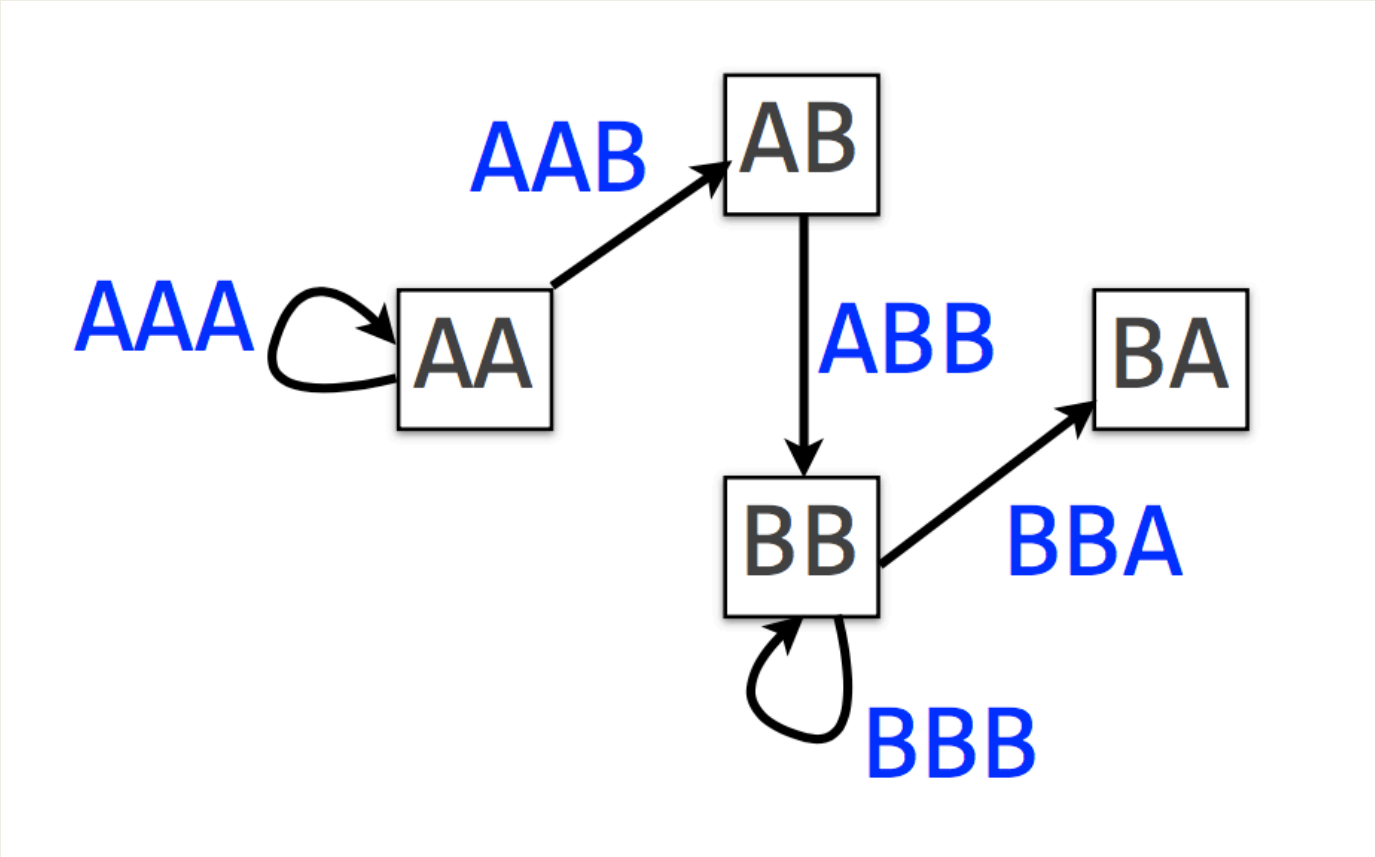

Slide: adapted from Ben Langmead, John Hopkins

DBGs can have multi-edges, making them multi-graphs

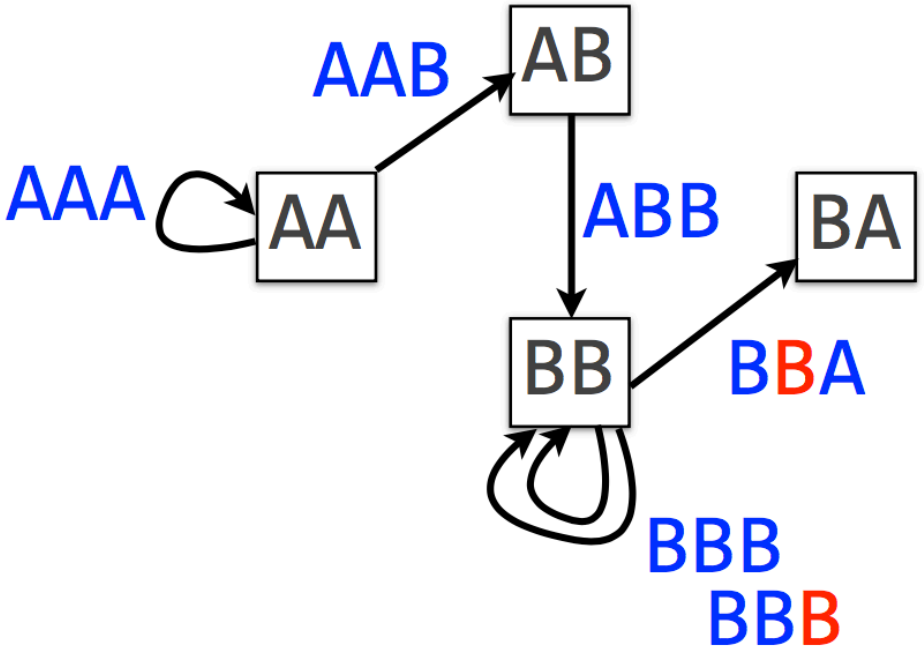

If we add one more B to our input string: AAABBBBA, and rebuild the De Bruijn graph accordingly, we get a *multiedge*.

Slide: adapted from Ben Langmead, John Hopkins

Graph terminology

Directed **multigraph** $G(V, E)$ consists of set of *vertices*, V and **multiset** of *directed edges*, E

Otherwise, like a directed graph

Node's *indegree* = # incoming edges

Node's *outdegree* = # outgoing edges

De Bruijn graph is a directed multigraph

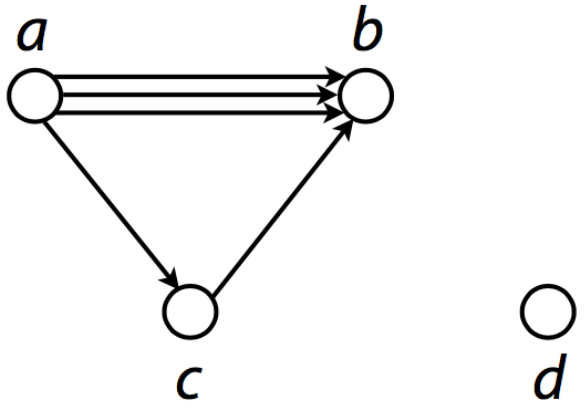

$V = \{ a, b, c, d \}$

$E = \{ \underbrace{(a, b), (a, b), (a, b)}_{\text{Repeated}}, (a, c), (c, b) \}$

Slide: adapted from Ben Langmead, John Hopkins

Graph terminology (cont.)

Node is *balanced* if indegree equals outdegree

Node is *semi-balanced* if indegree differs from outdegree by 1

Graph is *connected* if each node can be reached by some other node

Eulerian walk visits each edge exactly once

Not all graphs have Eulerian walks. Graphs that do are *Eulerian*.

A directed, connected graph is Eulerian if and only if it has at most 2 semi-balanced nodes and all other nodes are balanced

Jones and Pevzner section 8.8

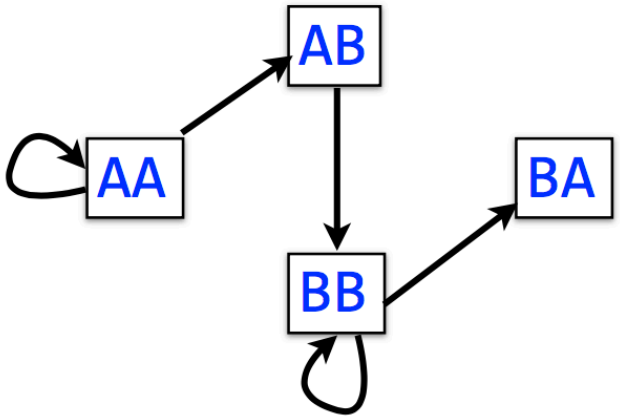

Slide: adapted from Ben Langmead, John Hopkins

Graph terminology (cont.)

Node is *balanced* if indegree equals outdegree

Node is *semi-balanced* if indegree differs from outdegree by 1

Graph is *connected* if each node can be reached by some other node

Eulerian walk visits each edge exactly once

Not all graphs have Eulerian walks. Graphs that do are *Eulerian*.

A directed, connected graph is Eulerian if and only if it has at most 2 semi-balanced nodes and all other nodes are balanced

Jones and Pevzner section 8.8

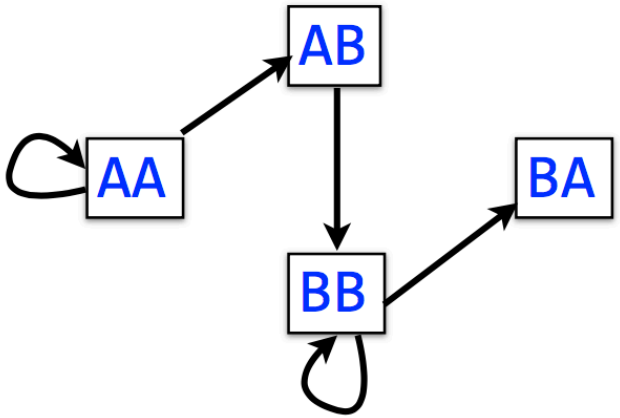

Slide: adapted from Ben Langmead, John Hopkins

Back to our De Bruijn graph

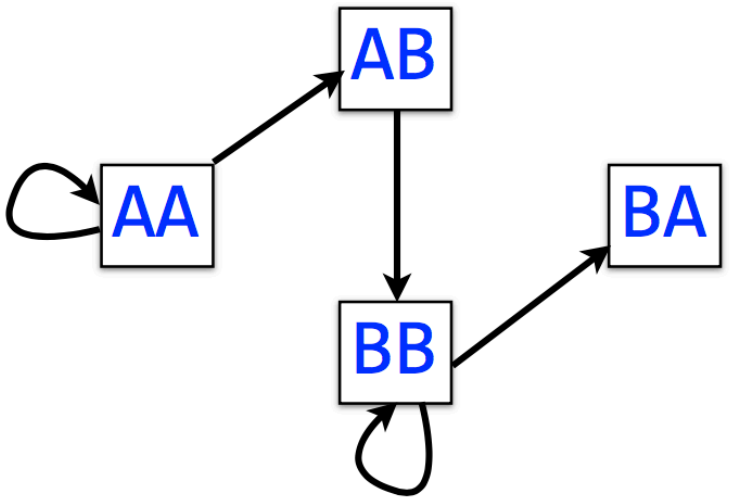

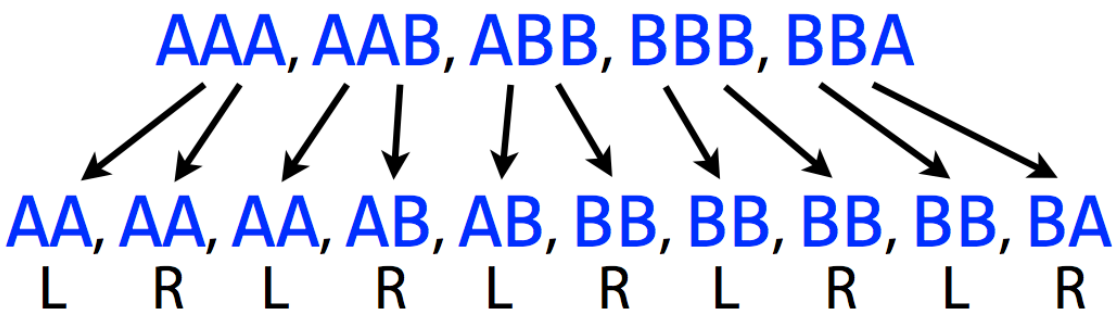

Is it Eulerian? Yes

Argument 1: AA → AA → AB → BB → BB → BA

Argument 2: AA and BA are semi-balanced, AB and BB are balanced

Slide: adapted from Ben Langmead, John Hopkins

How to get the sequence from an Eulerian path?

Back to our De Bruijn graph

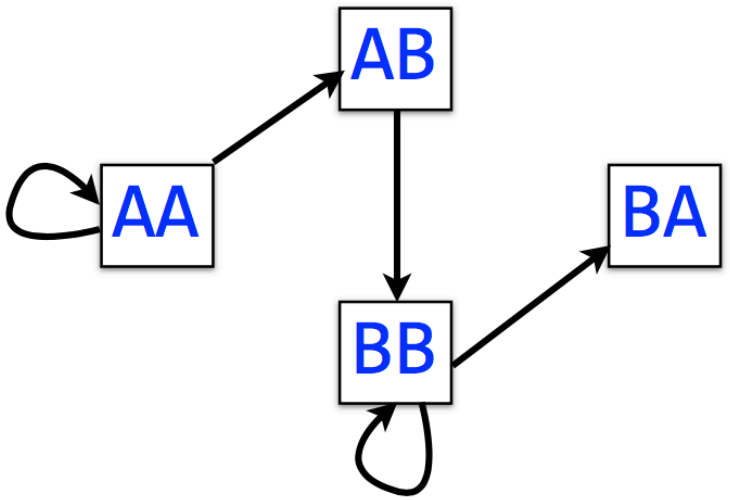

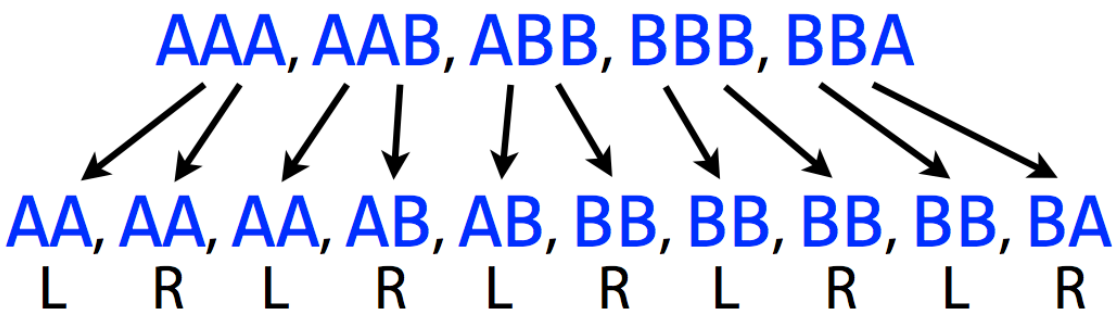

Is it Eulerian? Yes

Argument 1: AA → AA → AB → BB → BB → BA

Argument 2: AA and BA are semi-balanced, AB and BB are balanced

Slide: adapted from Ben Langmead, John Hopkins

How to get the sequence from an Eulerian path?

Back to our De Bruijn graph

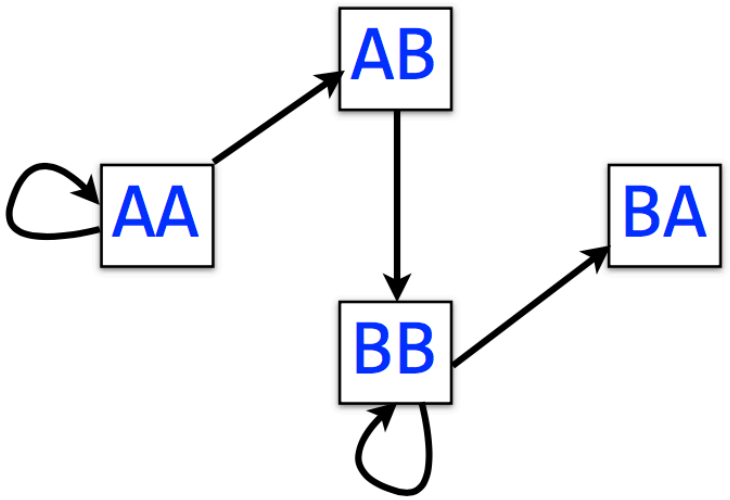

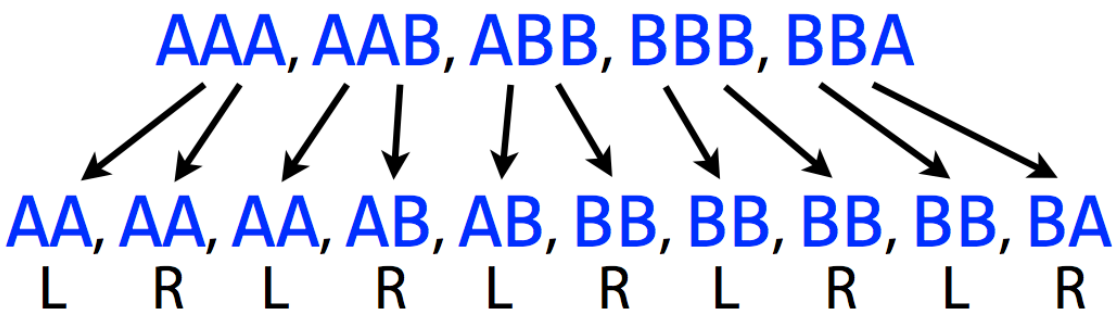

Start with the sequence in the first node. Follow the path, adding on one base each time.

Is it Eulerian? Yes

Argument 1: AA → AA → AB → BB → BB → BA → AAABBBA

Argument 2: AA and BA are semi-balanced, AB and BB are balanced

Slide: adapted from Ben Langmead, John Hopkins

Handout 1: work with a partner

Goals:

1) Practice the mechanics of constructing a de Bruijn graph
2) See issues that that affect both OLC and DBG assembly
3) Think about how we would ask a computer to find an Eulerian path

Creating Eulerian paths

① 4^k

② ACGTAG $O(G)$

$G-k+1$

④

③ ZAB, ABC, BCD,
CDA, DAB, ABE, BEF
EFA, FAB, ABY

$G=12$
$k=3$

10 k-mers

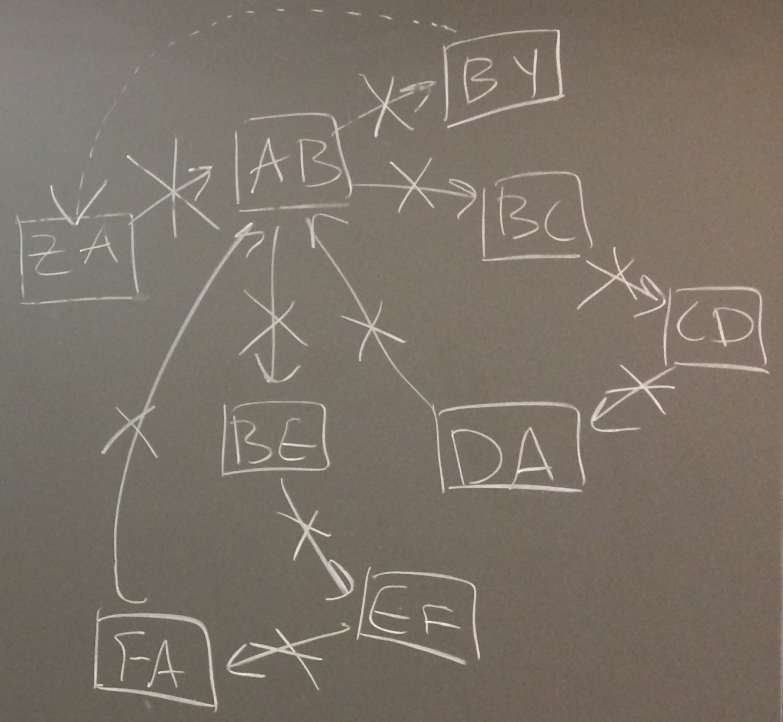

(5) ZABCDABEFABY

ZABEFABCDABY

(6) no

(7) 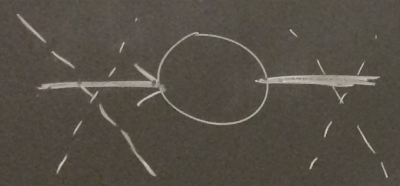

edges

$O(|E|)$

Fleury's Algorithm $O(|E|^2)$

- start at node w/ more outgoing edges

while there are still edges:

$O(|E|)$ { • traverse & delete edge that does not disconnect graph (if possible)

$E = \{(a,b), (a,b) \ldots\}$

going

Recursive Algorithm

- start at any node u

cycle # type stack

find_cycle(u):

for each edge e=(u,v):

remove e

find_cycle(v)

push u onto cycle

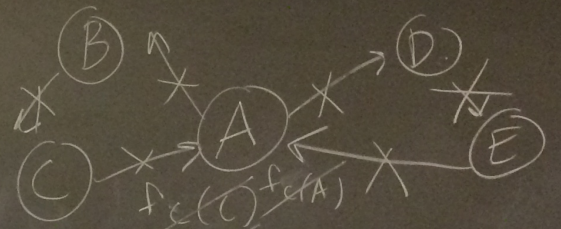

~~$f_c(C)$~~ ~~$f_c(A)$~~

~~$f_c(B)$~~

~~$f_c(D)$~~

~~$f_c(A)$~~

~~$f_c(E)$~~

~~$f_c(D)$~~

D
E
A
B
C
A
D